SONY

Car Stereo
Service Bulletin

Sony Service Company · Technical Services
A Division of Sony Corporation of America
Sony Drive, Park Ridge, New Jersey 07656

Model: CDX-R88 **No.** 98

Subject: Amp Remote Out Fails To Turn On Power Amps **Date:** May 9, 1988

Symptom:
(12)

The amp remote output cannot turn on a number of amplifiers connected in parallel. The maximum current available at this output is 35mA. The input current to other manufacturer's amplifiers may be more than 10mA per unit.

Solution:
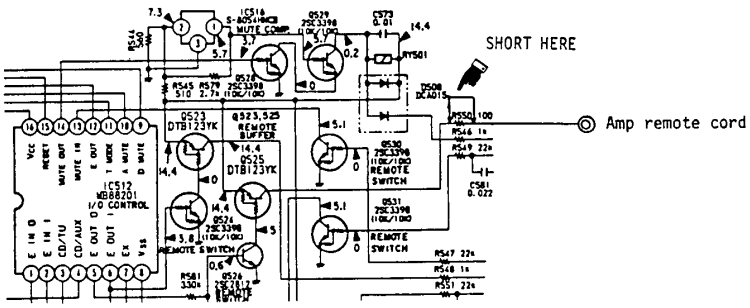
Jumper across R550 (100 ohms) on the main board as shown.